SPYRA PRIMO®

Polyethylene pipes and fittings

SYSTEMU

CARBOPIPE

FOR CONSTRUCTION OF PIPELINES IN MINING FACILITIES

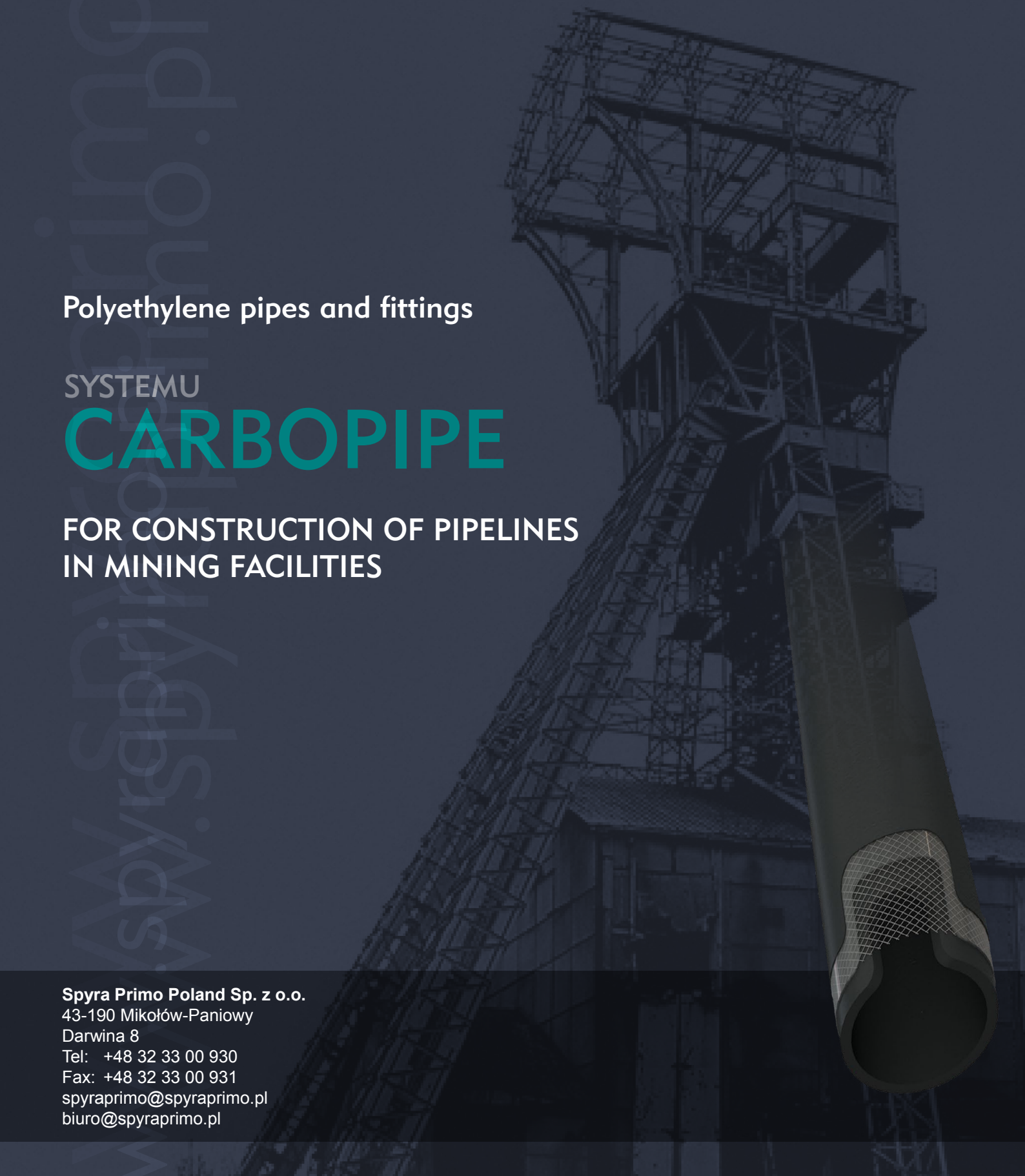

Spyra Primo Poland Sp. z o.o.
43-190 Mikołów-Paniowy
Darwina 8
Tel: +48 32 33 00 930
Fax: +48 32 33 00 931
spyraprimo@spyraprimo.pl
biuro@spyraprimo.pl

SPYRA PRIMO

Company Range

Pipes, fittings, fixtures and equipment for construction of pressure pipelines in mining facilities

SPYRA PRIMO offers end-to-end systems of plastic pipes and fittings, and steel pipes with fixtures for construction of pressure pipelines in mining facilities:

in particular:

- **CARBOPIPE system SPE pipes: diameter range from DN90 to DN500, max. rated pressure of 64 bar,**
- **CARBOPIPE system PSPE pre-insulated pipes: diameter range from DN90 to DN420, max. rated pressure of 64 bar,**
- **ST flanged steel pipes and STPE flanged steel pipes with plastic lining: diameter range of DN65 to DN600, max. rated pressure of 150 bar,**
- **PST pre-insulated flanged steel pipes and PSTPE pre-insulated flanged steel pipes with plastic lining: diameter range of DN65 to DN350, max. rated pressure of 150 bar,**
- **fixtures, fittings and connection systems,**
- **end-to-end equipment for pipeline construction (including sling systems),**
- **know-how in design and construction of pipelines from the Company products and other commercially available products.**

The detailed requirements for the listed pipes are defined in Company standards and operation and maintenance manuals.

The documents have been prepared in accordance with the current regulations of law, including but not limited to:

Polish Act of 4 February 1994 on the Geological and Mining Law (Polish Journal of Laws 2005, issue 228 item 1947 as amended);

Regulation of the Polish Minister of Economy, dated 28 June 2002, concerning the occupational hygiene and safety, operation management and special fire protection in underground mining facilities (Polish Journal of Laws, issue 139 item 1169, and PJoL 2006, issue 124 item 863), with special consideration of the following provision:

§ 360. The mining excavations shall use chemical materials and plastic products which meet the requirements for fire retardancy, anti-static protection, and non-toxicity, whereas belt conveyors shall be equipped with fire-retardant belts, operating controls and automatically triggered fire extinguishing equipment.

Contents

CARBOPIPE system SPE pipes and fittings for construction of pressure pipelines in mining facilities

Introduction General	3
CARBOPIPE System	4
CARBOPIPE system SPE pipes	5
CARBOPIPE system PSPE pre-insulated pipes	12
ST flanged steel pipes	18
STPE flanged steel pipes with plastic lining	18
PST pre-insulated flanged steel pipes	22
PSTPE pre-insulated flanged steel pipes with plastic lining	22
Certificates	25

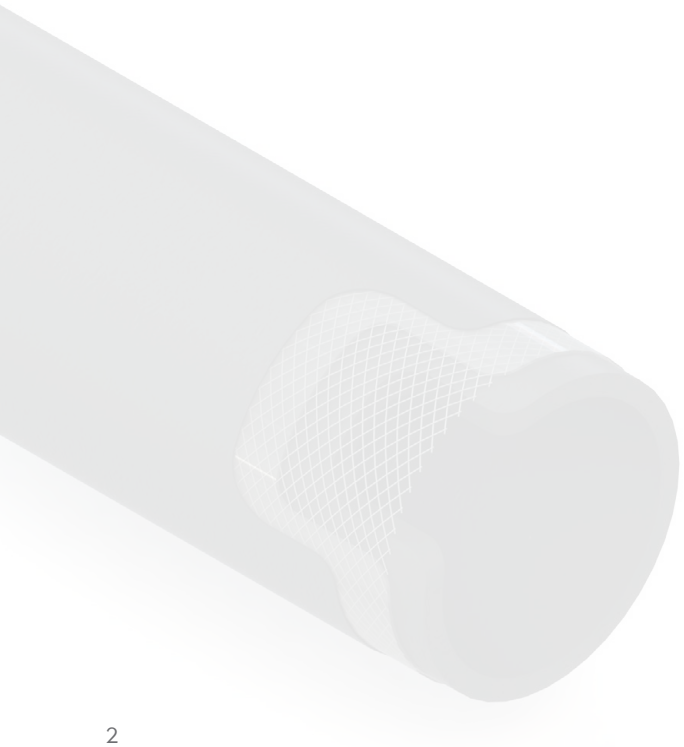

Introduction General

SPYRA PRIMO Poland Sp. z o.o.

Since the year 1983, SPYRA PRIMO Poland Sp. z o.o. has been manufacturing plastic pipes and pipe fittings for construction of buried telecommunication and power engineering systems, natural gas and water supply transport pipeline networks, and pressure sewage systems. Basing on its production capacities, the achievements to date, and the employee skills and knowledge, SPYRO PRIMO has introduced to its growth plans the program for launching the production of SPE pipes of the CARBOPIPE system, intended for construction of pressure pipelines in mining facilities, as well as PSPE pre-insulated pipelines for construction of mining climate control systems.

Development

Due to the stringent requirements for products for mining applications concerning durability, performance and safety, as well as new technological processes, environmental requirements and many other factors we have converted traditional piping and fitting systems into technically advanced products.

SPYRA PRIMO focuses on product development and development of manufacturing processes using the state-of-the-art processing lines from leading and renowned global manufacturers.

The know-how in the selection, design, optimisation and construction of pipelines, as well as our cooperation with R&D facilities and universities have been beneficial to all stakeholders while assuring cost-effective and secure project implementation.

SPYRA PRIMO hires a staff of experienced experts in the areas of design and processing of plastics; the Company also has in-house research facilities.
We develop pipes for custom technical uses and manufacturing processes thereof that meet the needs and expectations of customers.

ISO 9001 Certificate

The Company's Quality Management System covers all organisational units and the whole business. It is applied to all process phases, from reception of RFQs, orders and customer contract signing to final products and services. Production organisation and quality control allow running monitoring, setup, and adjustment of all key operating parameters of the production lines and mated equipment.

SPYRA PRIMO Poland Sp. z o.o. has a fully furnished production laboratory operated for testing of input materials and final products. Every manufactured lot of products is releases with the CE Declaration of Conformity. Effective solving of all natural environment protection issues has been our constant care.

TÜVRheinland CERTIFIED
www.tuv.com
ID 9105017794

All products of SPYRA PRIMO Sp. z o.o. have the required environmental certificates.

http://www.spyraprimo.pl

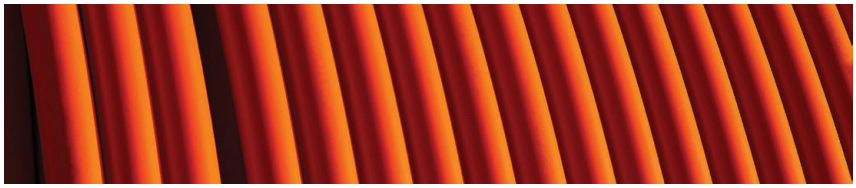

CARBOPIPE System

Lower costs of pipeline construction and operation
with high versatility and repurposeability of pipelines

Application environment

- Mining facilities: underground rooms and headings (including shafts) with the Polish methane explosion hazard level „a", „b" lub „c", and the Polish coal dust explosion hazard class „A" lub „B"; intended for mining of basic and common resources, especially hard coal.
- Mining facilities that excavate basic and common resources excluding hard coal, natural gas and oil, with rooms and headings with methane and/or coal dust explosion hazard, including mine shafts.
- Mining facilities located on the surface, including mechanised coal processing plants.

Intended use

Construction of pressure pipelines, especially for:

- fire-fighting systems,
- drainage systems,
- transport systems of non-flammable liquids, water-based suspensions, and solid suspensions (filling, hydraulic transport),
- processing systems,
- compressed air or inert gas systems,
- methane venting systems,
- climate control (air conditioning) systems.

Advantages

- significant reduction in material consumption,
- significantly lower weight in comparison to steel pipes, resulting in easier and less expensive:
  - storage, loading, shipping and unloading of materials and equipment,
  - execution of work tasks,
  - easy and fast assembly, disassembly, replacement and maintenance through easier handling of materials and equipment that do not require heavy tools, welding machines or any extra devices,
- easy application of staged development of pipeline systems (the major share of costs),
- easy connectivity with other existing pipelines during extension and replacement,
- easy branching,
- significantly reduced costs of operation due to:
  - low medium flow resistance and high internal surface smoothness which assure solid hydraulic performance throughout the operating life,
  - the longest possible life and longer operation,
  - resistance to outer and inner corrosion, ageing and build-up clogging,
  - high resistance to propagation of cracks, mechanical damage, impact and scratching.

CARBOPIPE system
SPE pipes

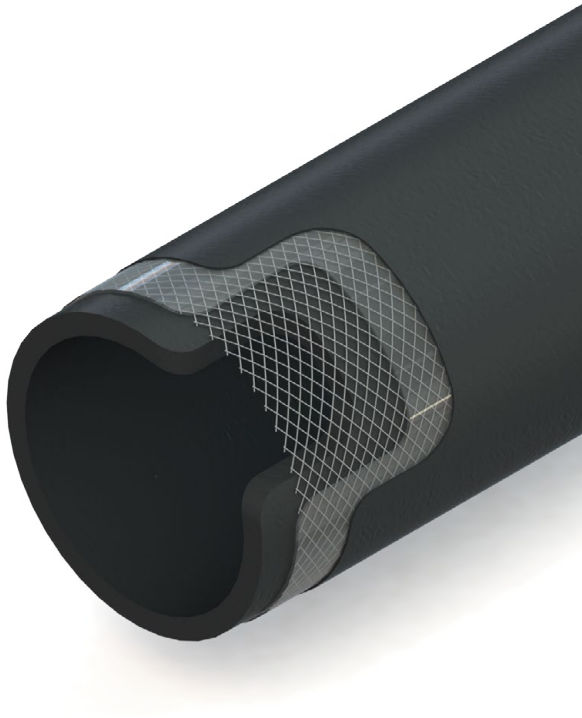

Structure

The detailed requirements for pipes are established in the Company Standard ZN-37/2012 and the operation and maintenance manual DTR-37/2012.

Main design features of SPE polyethylene pipes:

- multi-layered coextruded structure,
- permanent bonding of individual layers,
- the manufacturing method assures solid wall structure of finished multi-layered composite pipes.

The figure shows the structural design of the SPE pipe with its characteristic layers.

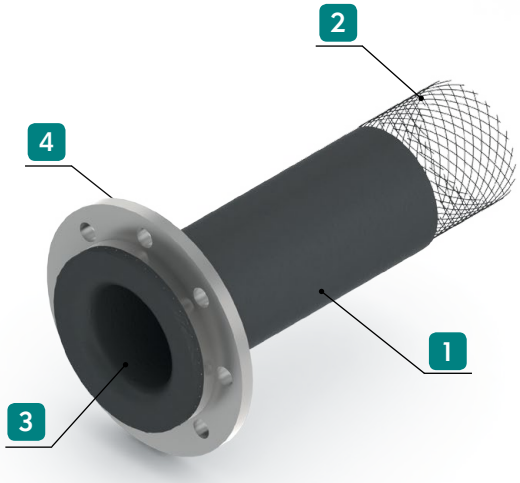

Legend:

1. **Outer layer**
   PE 100 with flame-retarding and anti-static properties.
2. **Insert**
   Steel wire with PE (as above)
3. **Inner layer**
   PE (as above)
4. **Free flange**

Product range

The SPE pipes have been classified by the criteria of: use, application environment (see Table 1), physical and mechanical properties of input materials (see Table 2), nominal outer diameter (d_n), wall thickness (e_n) and nominal pressure (PN) (see Table 3). This results in the following pipe types according to the template as below:

- use,
- application environment,
- flame retardancy and anti-static properties,
- nominal pressure (PN), units [bar],
- nominal outer diameter (d_n), wall thickness (e_n), units [mm].

Table 1. Classification of SPE pipes by use and application environment

Pipe type	Use	Application environment
SPE – KTW	transport pipelines for: ▪ water, ▪ non-flammable liquids, ▪ water-based suspensions, ▪ compressed air *).	▪ underground mining facilities located in methane and methane free fields of headings with the Polish methane explosion hazard level „a", „b" lub „c"and the Polish coal dust explosion hazard class „A" lub „B" including mine shafts, ▪ surface mining facilities and surface-based installations, ▪ *) underground mining facilities that excavate basic and common resources excluding hard coal, natural gas and oil, with rooms and headings with methane and/or coal dust explosion hazard, including mine shafts.
SPE – KTG	transport pipelines for: ▪ water, ▪ non-flammable liquids, ▪ water-based suspensions, ▪ compressed air, ▪ inert gases, ▪ methane.	
SPE – KA	transport pipelines for: ▪ water, ▪ non-flammable liquids, ▪ water-based suspensions.	▪ underground mining facilities that excavate basic and common resources excluding hard coal, natural gas and oil, with rooms and headings with methane and/or coal dust explosion hazard, including mine shafts, ▪ surface mining facilities and surface-based installations.

Table 2. Classification of SPE pipes by flame retardancy and anti-static properties

Pipe type	Pipe layer	Flame retardancy designation / flammability class	Layer resistance [Ω/m]	
			Surface	Through
SPE – KTW	outer	T / V-0	≤ 1,0x10⁹	≤ 1,0x10⁹
	insert	T / V-1	-	-
	inner			
SPE – KTG	outer	T / V-0	≤ 1,0x10⁶	≤ 1,0x10⁶
	insert	T / V-1		
	inner			
SPE - KA	outer	-	≤ 1,0x10⁹	≤ 1,0x10⁹
	insert		-	-
	inner			

T - flame-retarding

All layers of SPE-KTW and SPE-KTG pipes can be manufactured in versions with the flammability class of V-0 on custom order.

Table 3. Classification of SPE pipes by geometrical dimensions and nominal pressure

Nominal dimension DN (DN/OD)	Nominal outer diameter d_n [mm]	Nominal pressure, PN [bar]						
		6,3 transport of gases or liquids 0,5 vacuum pressure for methane venting	8 gas transport 16 liquid transport	10 gas transport 20 liquid transport	25 liquid transport	30 liquid transport	40 liquid transport	**64** transport of gases or liquids
		PE-KTG, SPE-KTW						
		Nominal thickness e_n [mm]						
90	90	5,5 $^{+1,4}$	7,0 $^{+1,4}$	7,5 $^{+1,4}$	8,0 $^{+1,4}$	8,5 $^{+1,4}$	9,0 $^{+1,4}$	-
110	110	6,0 $^{+1,4}$	7,5 $^{+1,4}$	10,0 $^{+1,4}$	11,0 $^{+1,4}$	11,0 $^{+1,4}$	11,7 $^{+1,4}$	13,5 $^{+1,5}$
125	125	6,0 $^{+1,5}$	9,0 $^{+1,4}$	10,0 $^{+1,4}$	11,5 $^{+1,4}$	13,0 $^{+1,4}$	13,5 $^{+1,5}$	15,0 $^{+1,5}$
140	140	6,0 $^{+1,5}$	11,0 $^{+1,5}$	11,5 $^{+1,5}$	12,0 $^{+1,5}$	13,5 $^{+1,5}$	14,5 $^{+1,5}$	-
160	160	6,5 $^{+1,6}$	13,3 $^{+1,6}$	13,5 $^{+1,6}$	13,5 $^{+1,6}$	14,0 $^{+1,6}$	15,5 $^{+1,6}$	18,0 $^{+1,6}$
^{N} 160	174	7,0 $^{+1,6}$	13,5 $^{+1,6}$	13,5 $^{+1,6}$	13,5 $^{+1,6}$	15,0 $^{+1,8}$	17,0 $^{+1,8}$	-
180	180	8,0 $^{+1,8}$	13,5 $^{+1,8}$	13,5 $^{+1,8}$	14,0 $^{+1,8}$	15,0 $^{+1,8}$	17,0 $^{+1,8}$	-
^{N} 180	190	-	-	-	-	-	-	20,0 $^{+1,8}$
200	200	8,0 $^{+1,8}$	13,5 $^{+1,8}$	14,0 $^{+1,8}$	14,5 $^{+1,8}$	16,0 $^{+1,8}$	19,5 $^{+1,8}$	-
^{N} 225	220	10,0 $^{+1,8}$	14,0 $^{+1,8}$	14,0 $^{+1,8}$	15,0 $^{+1,8}$	17,0 $^{+1,8}$	20,0 $^{+1,8}$	-
225	225	10,0 $^{+1,8}$	14,0 $^{+1,8}$	14,5 $^{+1,8}$	15,0 $^{+1,8}$	17,0 $^{+1,8}$	20,0 $^{+1,8}$	20,0 $^{+1,8}$
^{N} 225	230	-	-	-	-	-	-	22,5 $^{+1,8}$
250	250	10,0 $^{+2,2}$	14,5 $^{+2,2}$	15,0 $^{+2,2}$	15,5 $^{+2,2}$	18,5 $^{+2,2}$	23,0 $^{+2,2}$	-
^{N} 280	272	11,0 $^{+2,2}$	16,0 $^{+2,2}$	17,5 $^{+2,2}$	17,5 $^{+2,2}$	^{S} 24,0 $^{+2,2}$	^{S} 24,0 $^{+2,2}$	-
280	280	11,0 $^{+2,2}$	17,0 $^{+2,2}$	17,5 $^{+2,2}$	17,5 $^{+2,2}$	^{S} 25,0 $^{+2,5}$	^{S} 25,0 $^{+2,5}$	-
315	315	11,5 $^{+2,4}$	17,5 $^{+2,4}$	18,5 $^{+2,4}$	19,5 $^{+2,4}$	^{S} 28,0 $^{+2,7}$	^{S} 28,0 $^{+2,7}$	-
^{N} 315	338	11,5 $^{+2,4}$	19,5 $^{+2,4}$	^{S} 21,0 $^{+2,4}$	^{S} 32,0 $^{+2,2}$	^{S} 32,0 $^{+2,2}$	^{S} 32,0 $^{+2,2}$	-
355	355	12,0 $^{+2,4}$	19,5 $^{+2,4}$	^{S} 21,0 $^{+2,4}$	^{S} 32,0 $^{+2,2}$	-	-	-
400	400	12,0 $^{+2,8}$	20,0 $^{+2,8}$	^{S} 29,0 $^{+2,8}$	^{S} 32,0 $^{+2,2}$	-	-	-
^{N} 400	420	12,0 $^{+2,8}$	22,4 $^{+2,8}$	^{S} 29,0 $^{+2,8}$	^{S} 32,0 $^{+2,2}$	-	-	-
500	500	15,0 $^{+2,8}$	22,4 $^{+2,8}$	29,0 $^{+2,8}$	32,0 $^{+2,8}$	-	-	-

^{N} designates pipes with non-standard nominal outer diameters (d_n)
^{S} designates pipes manufactured to custom orders

Nominal dimension (DN)

A numerical designation of a component dimension, which is different than in a component designated with thread dimension, and expressed by a suitably rounded number that is approximately equal to the manufacturing dimension given in millimetres

Nominal dimension (DN/OD)

The nominal dimension corresponding to outer diameter.

Nominal outer diameter (d_n)

A numerical designation of the outer diameter dimension, expressed by a suitably rounded number that is approximately equal to the manufacturing dimension given in millimetres.

Pipe connection method

Flanged connection

The individual pipe sections are terminated with flange profiles on each end for connection with other pipes by fastening with screw joints. The flange profile, being an integral part of the pipe, is made from the pipe end by plastic forming and features reinforcements which are extensions of the pipe reinforcement.

The geometrical dimensions of flange connections (see Table 4) conform to PN-EN 1092-1+A1:2013-07E.
The dimensions of non-standard pipes with the pressure rating of PN20 and PN30 are the dimensions for PN16 and PN25, respectively.

The CARBOPIPE flange connection dimensions are compatible with steel pipes, e.g.:

- the SPE DN110 and DN125 pipes match the DN100 steel pipe,
- the SPE DN160 and DN180 pipes match the DN150 steel pipe,
- the SPE DN200 and DN225 pipes match the DN200 steel pipe, etc.

The steel ring thickness and the number and diameter of fastening holes can be adapted to custom requirements or the system design.

Other pipe connection methods require prior consulting with the manufacturer.

Diagram and designations of the SPE pipe flange connection

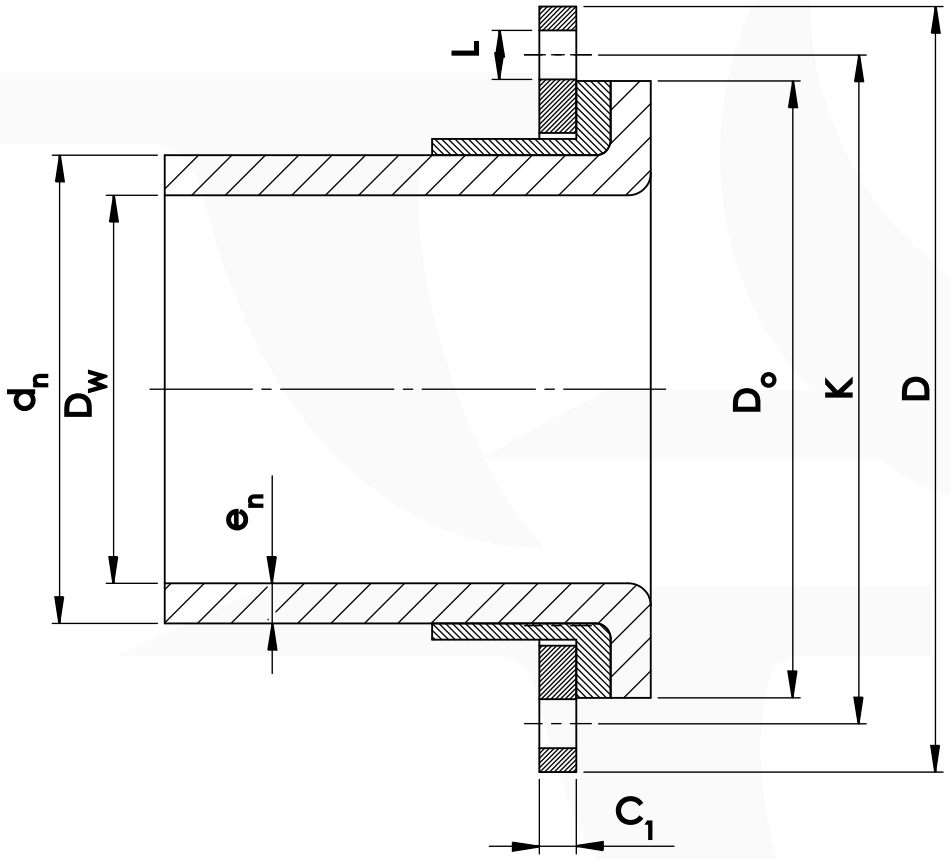

d_n - nominal outer diameter of the pipe,
e_n - nominal wall thickness of the pipe (see Table 3),
D_w - inner diameter of the pipe,
D_o - pipe flange diameter,
D - outer diameter of the free pipe flange,
K - pitch diameter of the free flange holes,
L - hole diameter,
C_{1min} - minimum thickness of the free flange with guaranteed flange connection strength,
C_1 - thickness of the free flange acc. to PN-EN 1092-1+A1:2013-07E.

Table 4. Geometrical dimensions of the SPE pipe flange connection

	DN (steel pipe)	DN (DN/OD) (SPE pipe)	d_n [mm]	D_w [mm]	D_o [mm]	D [mm]	K [mm]	L [mm]	C_{1min}/C_1 [mm]	L1min / L1	Bolts, number x size
PN 2,5 PN 6,3	80	90	90	79,0	130	190	150	18	10/18	90/100	4 x M16
	100	110	110	98,0	150	210	170	18	10/18	90/100	4 x M16
		125	125	113,0	150	210	170	18	10/18	90/100	4 x M16
	125	140	140	128,0	180	240	200	18	12/20	100/110	8 x M16
	150	160	160	147,0	205	265	225	18	12/20	100/110	8 x M16
		N 180	174	160,0	205	265	225	18	12/20	100/110	8 x M16
		180	180	164,0	205	265	225	18	14/20	100/120	8 x M16
	200	200	200	184,0	260	320	280	18	14/22	110/120	8 x M16
		N 225	220	200,0	260	320	280	18	14/22	110/130	8 x M16
		225	225	205,0	260	320	280	18	14/22	120/130	8 x M16
	250	250	250	230,0	315	375	335	18	14/24	120/140	12 x M16
		N 280	272	250,0	315	375	335	18	14/24	120/140	12 x M16
		280	280	258,0	315	375	335	18	14/24	120/140	12 x M16
	300	315	315	292,0	371	440	395	22	14/24	130/150	12 x M20
		N 315	338	315,0	371	440	395	22	14/24	130/150	12 x M20
	350	355	355	331,0	421	490	445	22	16/26	130/150	12 x M20
	400	400	400	376,0	471	540	495	22	16/28	130/150	16 x M20
		N 400	420	396,0	471	540	495	22	16/28	130/150	16 x M20
	500	500	506	470,0	608	645	600	22	30	210/220	20 x M20
PN 8, PN 10	80	90	90	76,0	138	200	160	18	12/20	90/110	8 x M16
	100	110	110	95,0	158	220	180	18	12/22	90/110	8 x M16
		125	125	107,0	158	220	180	18	12/22	100/120	8 x M16
	125	140	140	118,0	188	250	210	18	12/22	110/130	8 x M16
	150	160	160	133,4	216	285	240	22	12/24	110/140	8 x M20
		N 180	174	147,0	216	285	240	22	14/24	120/140	8 x M20
		180	180	153,0	216	285	240	22	14/24	120/140	8 x M20
	200	200	200	173,0	268	340	295	22	16/24	130/140	8 x M20
		N 225	220	192,0	268	340	295	22	16/24	130/140	8 x M20
		225	225	197,0	268	340	295	22	16/24	130/150	8 x M20
	250	250	250	221,0	320	395	350	22	16/26	130/150	12 x M20
		N 280	272	240,0	320	395	350	22	18/26	140/150	12 x M20
		280	280	246,0	320	395	350	22	18/26	140/160	12 x M20
	300	315	315	280,0	370	445	400	22	18/26	150/160	16 x M20
	350	355	355	316,0	430	505	460	22	20/28	150/170	16 x M24
	400	400	400	360,0	482	565	515	26	20/32	160/180	16 x M24
		N 400	420	375,0	482	565	515	26	20/32	160/190	16 x M24
	500	500	506	470,0	608	670	620	26	36/38	190/200	20 x M24
PN 16	80	90	90	76,0	138	200	160	18	14/20	100/110	8 x M16
	100	110	110	95,0	158	220	180	18	14/22	100/120	8 x M16
		125	125	107,0	158	220	180	18	14/22	100/120	8 x M16
	125	140	140	118,0	188	250	210	18	16/22	110/120	8 x M16
	150	160	160	133,4	216	285	240	22	16/24	120/140	8 x M20
		N 180	174	147,0	216	285	240	22	18/24	130/140	8 x M20
		180	180	153,0	216	285	240	22	18/24	130/140	8 x M20
	200	200	200	173,0	268	340	295	22	18/26	130/150	12 x M20
		N 225	220	192,0	268	340	295	22	18/26	130/150	12 x M20
		225	225	197,0	268	340	295	22	18/26	130/150	12 x M20
	250	250	250	221,0	320	405	355	26	18/29	140/160	12 x M24
		N 280	272	240,0	327	405	355	26	20/29	150/170	12 x M24
		280	280	246,0	327	405	355	26	20/29	150/170	12 x M24
	300	315	315	280,0	370	460	410	26	20/32	160/180	12 x M24
	350	355	355	316,0	430	520	470	26	24/35	170/190	16 x M24
	400	400	400	360,0	482	580	525	30	25/38	190/220	16 x M27
		N 400	420	375,2	482	580	525	30	25/38	190/220	16 x M27
	500	500	510	470,0	608	715	650	33	40/46	220/250	20 x M30

	DN (steel pipe)	DN (DN/OD) (SPE pipe)	d_n [mm]	D_w [mm]	D_o [mm]	D [mm]	K [mm]	L [mm]	C_{1min}/C_1 [mm]	L1min / L1	Bolts, number x size
PN 25	80	90	90	74,0	138	200	160	18	16/24	100/120	8 x M16
	100	110	110	88,0	166	235	190	22	16/26	110/130	8 x M20
		125	125	102,0	166	235	190	22	16/26	110/130	8 x M20
	125	140	140	116,0	188	270	220	26	18/28	120/140	8 x M24
	150	160	160	133,0	222	300	250	26	18/30	130/150	8 x M24
		N 180	174	147,0	222	300	250	26	18/30	130/150	8 x M24
		180	180	152,0	222	300	250	26	20/30	130/150	8 x M24
	200	200	200	171,0	282	360	310	26	20/32	140/160	12 x M24
		N 225	220	190,0	282	360	310	26	20/32	140/160	12 x M24
		225	225	195,0	282	360	310	26	20/32	140/160	12 x M24
	250	250	250	219,0	338	425	370	30	22/35	150/180	12 x M27
		N 280	272	237,0	338	425	370	30	24/35	160/180	12 x M27
		280	280	245,0	338	425	370	30	24/35	160/180	12 x M27
	300	315	315	276,0	395	485	430	30	25/38	170/200	16 x M27
	350	S 355	355	291,0	448	555	490	33	29/42	200/230	16 x M30
	400	S 400	400	320,0	510	620	550	36	30/46	230/160	16 x M33
	500	500	515	470,0	608	730	660	36	40/58	220/250	20 x M33
PN 40	80	90	90	72,0	138	200	160	18	18/24	110/120	8 x M16
	100	110	110	86,6	166	235	190	22	18/26	120/130	8 x M20
		125	125	98,0	166	235	190	22	18/26	120/140	8 x M20
	125	140	140	111,0	188	270	220	26	20/28	130/150	8 x M24
	150	160	160	129,0	222	300	250	26	20/30	140/160	8 x M24
		N 180	174	140,0	222	300	250	26	23/30	150/160	8 x M24
		180	180	146,0	222	300	250	26	23/30	150/160	8 x M24
	200	200	200	161,0	288	375	320	30	25/36	160/190	12 x M27
		N 225	220	180,0	288	375	320	30	25/36	160/190	12 x M27
		225	225	185,0	288	375	320	30	25/36	160/190	12 x M27
	250	250	250	204,0	345	450	385	33	25/42	170/210	12 x M30
		NS 280	272	224,0	345	450	385	33	25/42	170/210	12 x M30
		S 280	280	230,0	345	450	385	33	25/42	170/210	12 x M30
	300	S 315	315	259,0	395	515	450	33	25/48	180/230	16 x M30
		NS 315	338	274,0	395	515	450	33	25/48	190/240	16 x M30
PN 63	100	110	110	83,0	172	250	200	26	18/32	140/170	8 x M24
		125	125	95,0	172	250	200	26	18/32	140/170	8 x M24
	150	160	160	124,0	245	345	280	33	18/36	150/190	8 x M30
		180	180	150,0	222	345	280	33	23/36	170/190	8 x M30
	185	N 225	230	185,0	308	415	345	36	26/48	170/220	12 x M33
	200	225	225	185,0	288	415	345	36	26/48	170/220	12 x M33

N designates pipes with non-standard nominal outer diameters (d_n)
S designates pipes manufactured to custom orders

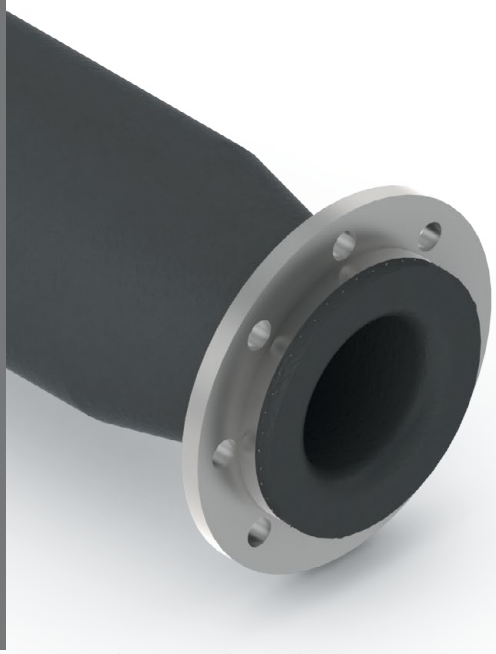

CARBOPIPE system
PSPE pre-insulated pipes

In order to reduce the heat exchange between the cold water flowing in a pipeline and its ambient environment (i.e. the airflow in the heading), thermal insulation is installed on pipelines for additional thermal resistance, and the reduction of heat-transfer coefficient and its dependent heat flux. Thermal insulation is required to have:

- low thermal conductivity,
- good flame resistance,
- high resistance to steam diffusion,
- long structural stability.

Intended use

- construction of pressure pipelines for transport of:
  - water,
  - brine,
  - water-based solutions,
  - aggressive liquid chemicals or other media,

- construction of systems and installations of:
  - mine climate control,
  - processing pipelines,
  - all surface-based types.

Application environment

- Mining facilities that excavate basic and common resources excluding hard coal, natural gas and oil, with rooms and headings with methane and/or coal dust explosion hazard, including mine shafts,
- Mining facilities located in methane and methane free fields of headings with the Polish methane explosion hazard level „a", „b" lub „c" and the Polish coal dust explosion hazard class „A" lub „B" including mine shafts,
- Surface mining facilities.

Key advantages

- low thermal conductivity,
- very good thermal insulation performance,
- complete integrity of insulation,
- no thermal bridges at joints,
- low medium flow resistance: 15 to 25% lower than in steel pipes.

Structure

The detailed requirements for pipes are established in the Company Standard ZN-33/2010 and the operation and maintenance manual DTR-33/2010.

The figure shows the structural design of the PSPE pipe.

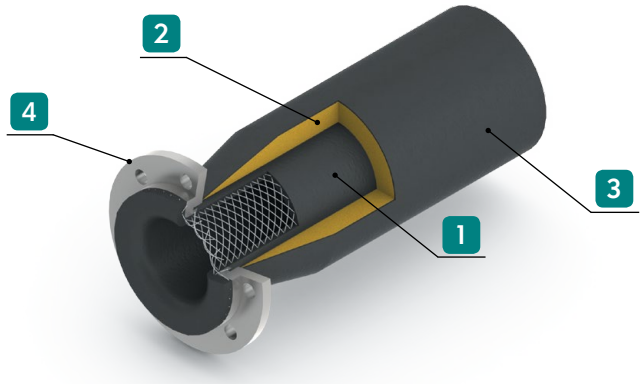

Legend:

1. **Line pipe**
   Type SPE-KTW
2. **Thermal insulation**
   Type PUR/T
3. **Protective shell**
   Type PO/AT
4. **Free flange**

Materials and requirements

Line pipe

The standard line pipe is made of the SPE-KTW pipe.
SPE-KA or SPE-KTG can be used instead in agreement with the ordering party.

Thermal insulation

The thermal insulation is made of hard polyurethane foam, type PUR/T, with the physical and mechanical properties shown in Table 5.

Table 5. Physical and mechanical properties of the PUR/T polyurethane foam.

Density	≥ 38 [kg/m^3]
Compressive strength	≥ 0,12 [MPa]
Flammability class	V-1
Oxygen index	≥ 21 [%]
Thermal conductivity	0,024 ÷ 0,028 [W/mK]

Protective shell

The protective shell is a class PE80 or PE100 HDPE pipe, type PO/AT, with the anti-static and flame-retarding properties listed in Table 6.

Table 6. Anti-static and flame retardancy of the PO/AT protective shell.

Modified plastic density	≥ 1,01 [g/cm^3]
Flammability class for the pipe material	V-0
Flame resistance: flame test of the pipe material	≤ 15 [s]
Surface resistance of the pipe	≤ 1,0x10^6 [Ω/m]

Pipe connection method

The individual pipe sections are terminated with flange profiles on each end for connection with other pipes by fastening with screw joints. The flange profile, being an integral part of the pipe, is made from the pipe end by plastic forming and features reinforcements which are extensions of the pipe reinforcement.

The geometrical dimensions of flange connections conform to PN-EN 1092-1+A1:2013-07E.

The geometrical dimensions of flange connections (see Table 7) are compatible with steel pipes, e.g.:

- the PSPE DN110 and DN125 pipes match the DN100 steel pipe,
- the PSPE DN160 and DN180 pipes match the DN150 steel pipe,
- the PSPE DN200 and DN225 pipes match the DN200 steel pipe, etc.

The steel ring thickness and the number and diameter of fastening holes can be adapted to custom requirements or the system design.

The thermal insulation thickness (s_n) for a standard pre-insulated pipe is shown in Table 7. The thermal insulation thickness can be greater than listed therein and adapted to custom requirements or the installation design (by using protective tubes with a larger nominal outer diameter, D_c in the piping unit).

Other pipe connection methods require prior consulting with the manufacturer.

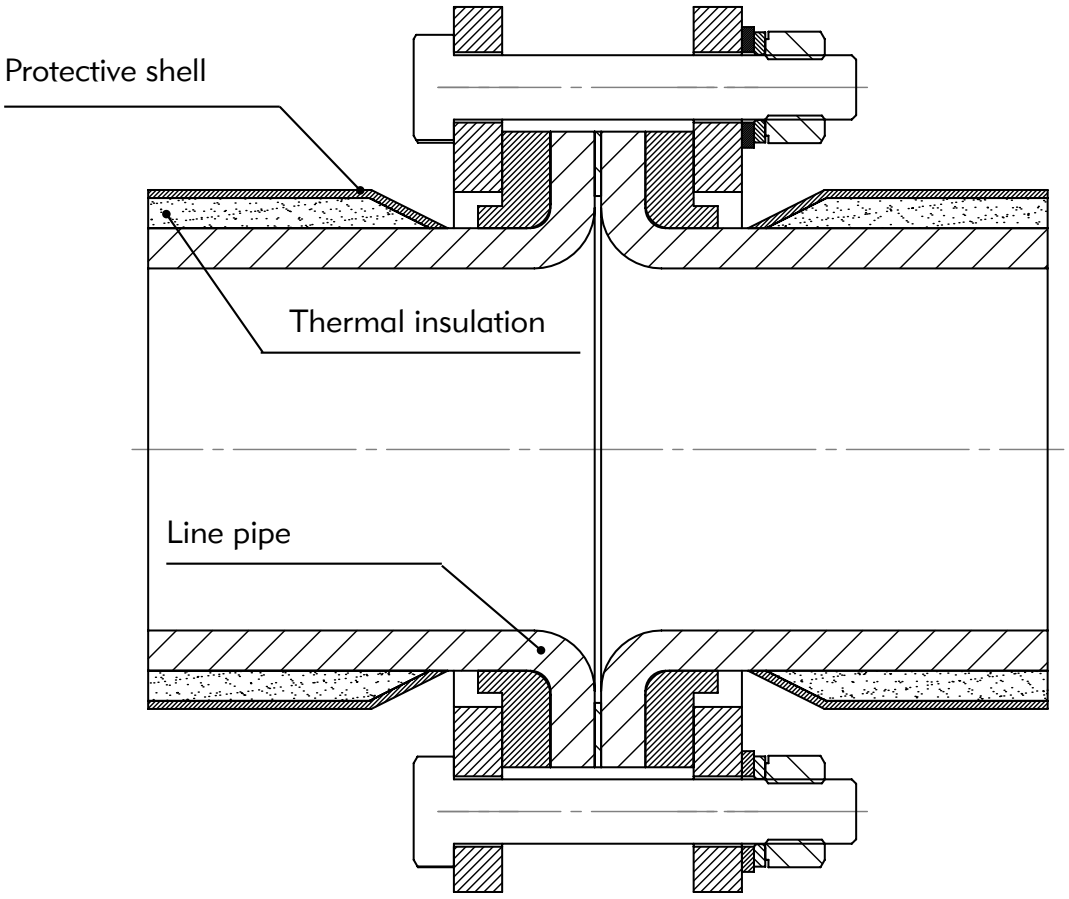

Diagram and designations of the PSPE pipe flange connection

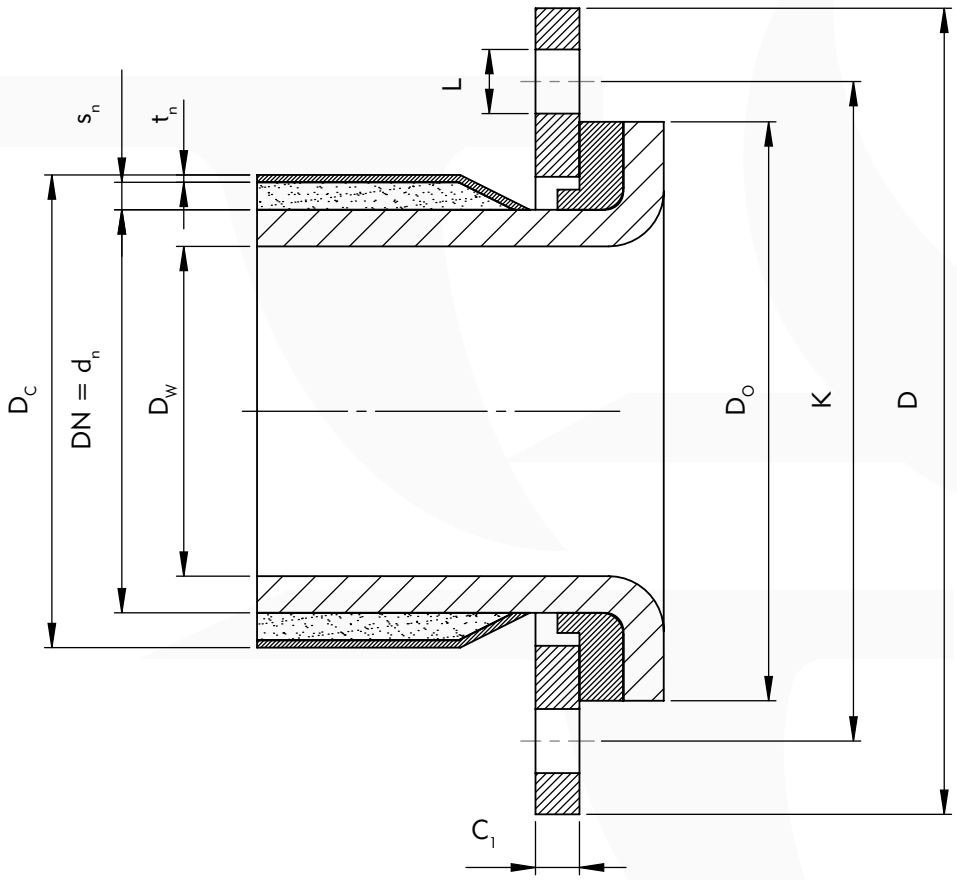

DN - nominal dimension of the PSPE pre-insulated pipe (corresponds to the SPE line pipe nominal dimension),
d_n - nominal outer diameter of the line pipe,
D_w - inner diameter of the line pipe,
D_c - nominal outer diameter of the protective shell,
s_n - nominal thickness of the thermal insulation,
t_n - nominal wall thickness of the protective shell,
D_o - nominal outer diameter of the line pipe flange,
D - outer diameter of the free pipe flange,
K - pitch diameter of the free flange holes,
L - diameter of the free flange holes,
C_{1min} - minimum thickness of the free flange with guaranteed flange connection strength,
C_1 - thickness of the free flange acc. to PN-EN 1092-1+A1:2013-07E.

Table 7. Geometrical dimensions of the PSPE pipe flange connection

	DN DN/ID steel pipe	DN DN/OD PSPE pipe	d_n	D_w	D_c	s_n	D_o	D	K	L	C_{1min} /C_1	Bolts, number x size
PN 10	80	90	90	76	160	30	138	200	160	18	12/20	8 x M16
	100	110	110	95	180	30	158	220	180	18	12/22	8 x M16
		125	125	107	200	32	158	220	180	18	12/22	8 x M16
	125	140	140	118	200	27	188	250	210	18	12/22	8 x M16
	150	160	160	133	225	29	216	285	240	22	12/24	8 x M20
		[N]180	174	147	250	34	216	285	240	22	14/24	8 x M20
		180	180	153	250	31	216	285	240	22	14/24	8 x M20
	200	200	200	173	280	35	268	340	295	22	16/24	8 x M20
		[N]225	220	192	300	35	268	340	295	22	16/24	8 x M20
		225	225	197	300	32	268	340	295	22	16/24	8 x M20
	250	250	250	221	315	28	320	395	350	22	16/26	12 x M20
		[N]280	272	240	340	29	320	395	350	22	18/26	12 x M20
		280	280	246	355	32	320	395	350	22	18/26	12 x M20
	300	315	315	280	380	37	370	445	400	22	18/26	12 x M20
	350	355	355	316	420	27	430	505	460	22	20/28	16 x M20
PN 16	80	90	90	76	160	30	138	200	160	18	14/20	8 x M16
	100	110	110	95	180	30	158	220	180	18	14/22	8 x M16
		125	125	107	200	32	158	220	180	18	14/22	8 x M16
	125	140	140	118	200	27	188	250	210	18	16/22	8 x M16
	150	160	160	133	225	29	216	285	240	22	16/24	8 x M20
		[N]180	174	147	250	34	216	285	240	22	18/24	8 x M20
		180	180	153	250	31	216	285	240	22	18/24	8 x M20
	200	200	200	173	280	35	268	340	295	22	18/26	12 x M20
		[N]225	220	192	300	35	268	340	295	22	18/26	12 x M20
		225	225	197	300	32	268	340	295	22	18/26	12 x M20
	250	250	250	221	315	28	320	405	355	26	18/29	12 x M24
		[N]280	272	240	340	29	327	405	355	26	20/29	12 x M24
		280	280	246	355	32	327	405	355	26	20/29	12 x M24
	300	315	315	280	380	37	370	460	410	26	20/32	12 x M24
	350	355	355	316	420	27	430	520	470	26	24/35	16 x M24
PN 20	80	90	90	75	160	30	138	200	160	18	14/20	8 x M16
	100	110	110	90	180	30	158	220	180	18	14/20	8 x M16
		125	125	105	200	32	158	200	180	18	14/22	8 x M16
	125	140	140	117	200	27	188	250	210	18	14/22	8 x M16
	150	160	160	133	225	29	216	285	240	22	16/22	8 x M20
		[N]180	174	147	250	34	216	285	240	22	16/24	8 x M20
		180	180	153	250	31	216	285	240	22	18/24	8 x M20
	200	200	200	172	280	35	268	340	295	22	18/24	12 x M20
		[N]225	220	192	300	35	268	340	295	22	18/26	12 x M20
		225	225	196	300	32	268	340	295	22	18/26	12 x M20
	250	250	250	220	315	28	320	405	355	26	18/26	12 x M24
		[N]280	272	237	340	29	327	405	355	26	18/29	12 x M24
		280	280	245	355	32	327	405	355	26	20/29	12 x M24
	300	315	315	278	400	37	370	460	410	26	20/29	12 x M24
	350	[S]355	355	313	420	27	430	520	470	26	20/32	16 x M24

	DN DN/ID steel pipe	DN DN/OD PSPE pipe	d_n	D_w	D_c	s_n	D_o	D	K	L	C_{1min} /C_1	Bolts, number x size
PN 30	80	90	90	73	160	30	138	200	160	18	16/24	8 x M16
	100	110	110	88	180	30	166	235	190	22	16/26	8 x M20
		125	125	99	200	32	166	235	190	22	16/26	8 x M20
	125	140	140	113	200	27	188	270	220	26	18/28	8 x M24
	150	160	160	132	225	29	222	300	250	26	18/30	8 x M24
		[N] 180	174	144	250	34	222	300	250	26	18/30	8 x M24
		180	180	150	250	31	222	300	250	26	20/30	8 x M24
	200	200	200	168	280	35	282	360	310	26	20/32	12 x M24
		[N] 225	220	186	300	35	282	360	310	26	20/32	12 x M24
		225	225	191	300	32	282	360	310	26	20/32	12 x M24
	250	250	250	213	315	28	338	425	370	30	22/35	12 x M27
		[NS] 280	272	224	340	29	338	425	370	30	24/35	12 x M27
		[S] 280	280	230	355	32	338	425	370	30	24/35	12 x M27
	300	[S] 315	315	259	400	37	395	485	430	30	25/38	16 x M27
		[NS] 315	338	274	420	36	395	485	430	30	25/38	16 x M27
PN 40	80	90	90	72	140	22	138	200	160	18	18/24	8 x M16
	100	110	110	87	160	22	166	235	190	22	18/26	8 x M20
		125	125	98	180	25	166	235	190	22	18/26	8 x M20
	125	140	140	111	200	27	188	270	220	26	20/28	8 x M24
	150	160	160	129	225	29	222	300	250	26	20/30	8 x M24
		[N] 180	174	140	250	34	222	300	250	26	23/30	8 x M24
		180	180	146	250	31	222	300	250	26	23/30	8 x M24
	200	200	200	161	250	21	288	375	320	30	25/36	12 x M27
		[N] 225	220	180	280	24	288	375	320	30	25/36	12 x M27
		225	225	185	280	26	288	375	320	30	25/36	12 x M27
	250	250	250	204	315	28	345	450	385	33	25/42	12 x M30
		[NS] 280	272	224	340	29	345	450	385	33	25/42	12 x M30
		[S] 280	280	230	355	32	345	450	385	33	25/42	12 x M30
	300	[S] 315	315	259	400	37	395	515	450	33	25/48	16 x M30
		[NS] 315	338	274	420	36	395	515	450	33	25/48	16 x M30

[N] designates pipes with non-standard nominal outer diameters (d_n)

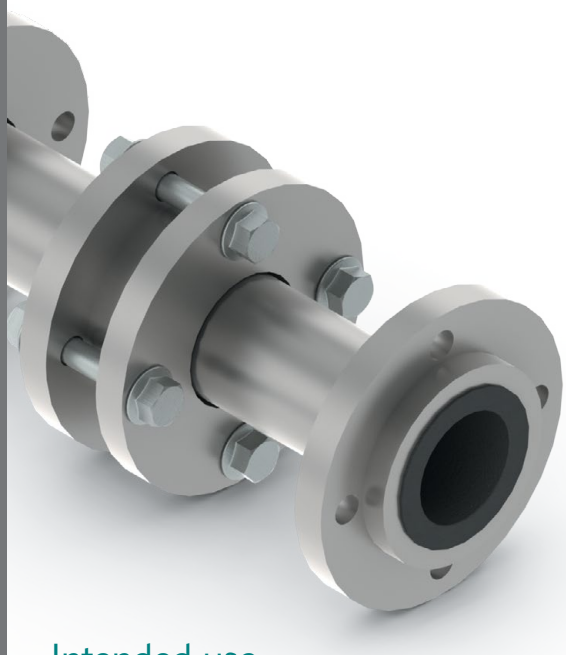

ST flanged steel pipes. STPE flanged steel pipes with plastic lining

Intended use

Construction of pressure pipelines, especially for:

- fire-fighting systems,
- drainage systems,
- processing systems,
- compressed air or inert gas systems,
- transport systems of non-flammable liquids, water-based suspensions, and solid suspensions (filling, hydraulic transport),
- methane venting systems,
- climate control (air conditioning) systems.

Application environment

- Mining facilities that excavate basic and common resources excluding hard coal, natural gas and oil, with rooms and headings with methane and/or coal dust explosion hazard, including mine shafts.
- Mining facilities: underground rooms and headings (including shafts) with the Polish methane explosion hazard level „a", „b" lub „c" and the Polish coal dust explosion hazard class „A" lub „B" intended for mining of basic and common resources, especially hard coal.
- Mining facilities located on the surface, including mechanised coal processing plants.

Structure

The detailed requirements for pipes are established in the Company Standard ZN-34/2011 and the operation and maintenance manual DTR-34/2011.

The figure shows the structural design of the ST and STPE pipes.

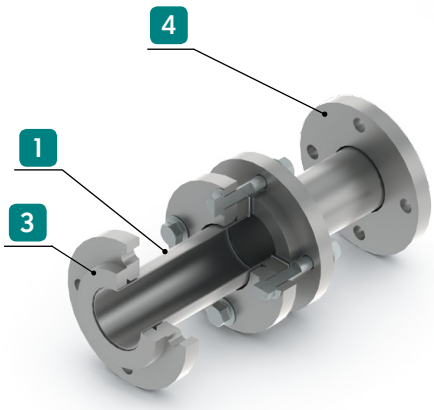

ST-R pipe

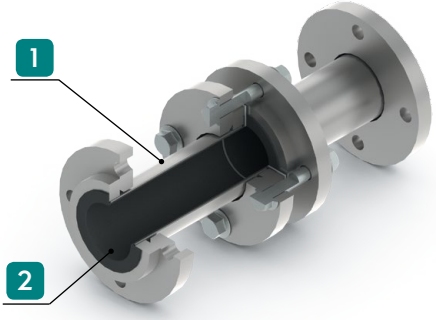

STPE-R pipe

Legend:

1. **ST steel pipe**
2. **Protective lining**
3. **Steel flange**
4. **Steel free flange**

Materials and requirements

Flanged steel pipe

Piping unit with the flanges and rings built in accordance with PN-EN 1092-1+A1:2013-07E.

- seamless steel pipe for pressure applications, compliant with the technical requirements of: PN-EN 10216-1,2,
- seamed steel pipe for pressure applications, compliant with the technical requirements of: PN-EN 10217-1,2.

Steel pipes of other technical specifications can be used ion request.

Protective lining

The inner layer (surface) of the steel pipe, made of plastic to protect the steel pipe.
It is made of PEHD in standard version.
The protective lining can be manufactured from other plastic materials on request.

Piping unit

A prefabricated product formed by the outer steel pipe with the protective insert installed inside.

Steel flanges

- type 32 welded flat ring, made acc. to PN-EN 1092-1+A1:2013-07E,
- type 02 free flat flange, made acc. to PN-EN 1092-1+A1:2013-07E,
- type 11 welded neck flange, made acc. to PN-EN 1092-1+A1:2013-07E.

Types (versions)

Table 8. ST steel pipes (without protective lining):

ST-R	Straight-line pipe version with the length specified in the order (max available length: 6 m)
ST-K	Elbow pipe version
ST-T	Pipe tee design version

Table 9. STPE steel pipes (with protective lining):

STPE-R	Straight-line pipe version
STPE-K	Elbow pipe version
STPE-T	Pipe tee design version

STPE-K elbow

STPE-T tee

Specification

Table 10 defines the basic technical specification of flanged steel pipes.
The maximum operating pressure has been determined for the steel pipe wall thickness only.

Table 10. Technical specification of STPE and ST flanged steel pipes

Outer diameter range d_z $d_{z(min)} \div d_{z(max)}$ [mm]	Steel pipe wall thickness e_r [mm]	Minimum inner lining thickness e_n [mm]	Maximum operating pressure p_d p_d (dla $d_{z(max)}$) $\div$ p_d (dla $d_{z(min)}$) [MPa]
76,1 ÷ 273	2	3	2,7 ÷ 9,7
76,1 ÷ 273	2,3	3	3,1 ÷ 11
76,1 ÷ 406,4	2,6	3	2,3 ÷ 12,5
76,1 ÷ 406,4	2,9	3	2,6 ÷ 14
76,1 ÷ 610	3,2	3	1,9 ÷ 16
76,1 ÷ 610	3,6	3	2,2 ÷ 16
76,1 ÷ 610	4	3	2,4 ÷ 16
76,1 ÷ 610	4,5	3	2,7 ÷ 16
76,1 ÷ 610	5	3	3 ÷ 16
76,1 ÷ 610	5,4	3	3,3 ÷ 16
76,1 ÷ 610	5,6	3	3,4 ÷ 16
76,1 ÷ 610	6,3	3	3,8 ÷ 16
76,1 ÷ 610	7,1	3	4,3 ÷ 16
76,1 ÷ 610	8	3	4,8 ÷ 16
76,1 ÷ 610	8,8	3	5,3 ÷ 16
76,1 ÷ 610	10	3	6,1 ÷ 16
76,1 ÷ 610	11	3	6,7 ÷ 16
76,1 ÷ 610	12,5	3	7,6 ÷ 16
76,1 ÷ 610	14,2	3	8,6 ÷ 16
76,1 ÷ 610	16	3	8,6 ÷ 16
76,1 ÷ 610	18	3	8,6 ÷ 16
76,1 ÷ 610	20	3	8,6 ÷ 16

NOTE:
The maximum operating pressure range is determined for the given steel pipe wall thickness (e_r) as follows:
p_d (dla $d_{z(max)}$) $\div$ p_d (dla $d_{z(min)}$).

Przykład:
At d_z=76,1 and e_r=2 the maximum operating pressure is 9,7 MPa.
At d_z=273 and e_r=2 the maximum operating pressure is 2,7 MPa.

Due to the range of flanges used in the pipes, the maximum operating pressure value is limited to PN160.

Relationship of maximum operating pressure to nominal pressure

The nominal pressure (PN) value can be assigned to the flanged pipe of defined geometrical dimensions (d_z x e_r) and the maximum operating pressure (p_d) (as defined in Table 11). The relationship of the maximum operating pressure (p_d) to the nominal pressure (PN) is shown in the table below:

Table 11. Relationship of the maximum operating pressure (p_d) to the nominal pressure (PN)

Maximum operating pressure p_d [MPa]	Nominal pressure PN [bar]
At 0< p_d ≤0,25	PN 2,5
At 0,25< p_d ≤0,6	PN 6
At 0,6< p_d ≤1,0	PN 10
At 1,0< p_d ≤16	PN 16
At 1,6< p_d ≤2,5	PN 25
At 2,5< p_d ≤4,0	PN 40
At 4,0< p_d ≤6,3	PN 63
At 6,3< p_d ≤10,0	PN 100
At 10,0< p_d ≤16,0	PN 160

Example:

For the pipe Ø76,1x2 (p_d= 9,7 MPa) PN=100 bar.

Geometrical dimensions of applied flanges

Pursuant to PN-EN 1092-1+A1:2013-07E, the form and type of applied flanges depends on the nominal pressure (PN) adopted for the given design of flanged steel pipe and its accessories.

For the pressure range of PN6 to PN40, the pipe design shall use type 32 welded flat flange and type 02 free flat flange.

For the pressure range of PN63 to PN160, the pipe design shall use type 11 neck flange.

The actual dimensions of flange connection components may vary from the values listed in the respective tables of PN-EN 1092-1+A1:2013-07E by the permissible tolerance values listed in Table 22 of PN-EN 1092-1+A1:2013-07E.
The number and diameter of holes for fasteners may vary from those listed in the respective tables of PN-EN 1092-1+A1:2013-07E and can be adapted to custom requirements or the system design
.

PST pre-insulated flanged steel pipes
PSTPE pre-insulated flanged steel pipes with plastic lining

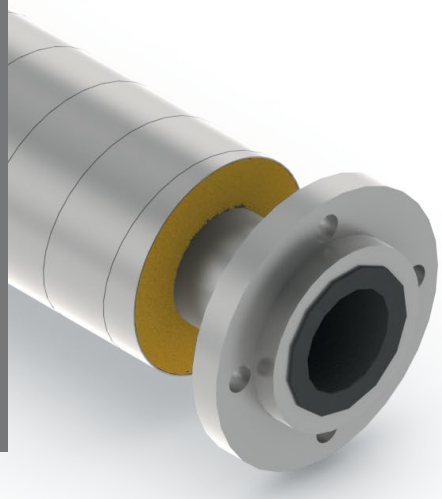

Intended use

- construction of pressure pipelines for transport of:
  - water,
  - brine,
  - water-based solutions,
  - aggressive liquid chemicals or other media,
- construction of systems and installations of:
  - mine climate control,
  - processing pipelines,
  - all surface-based types.

Application environment

- Mining facilities that excavate basic and common resources excluding hard coal, natural gas and oil, with rooms and headings with methane and/or coal dust explosion hazard, including mine shafts.
- Mining facilities located in methane and methane free fields of headings with the Polish methane explosion hazard level „a", „b" lub „c" and the Polish coal dust explosion hazard class „A" lub „B" including mine shafts.
- Surface mining facilities.

Structure

The detailed requirements for pipes are established in the Company Standard ZN-35/2011 and the operation and maintenance manual DTR-35/2011.

The figure shows the structural design of the PSTPE-R/PO/AT and PSTPE-R/SPIRO pipes.

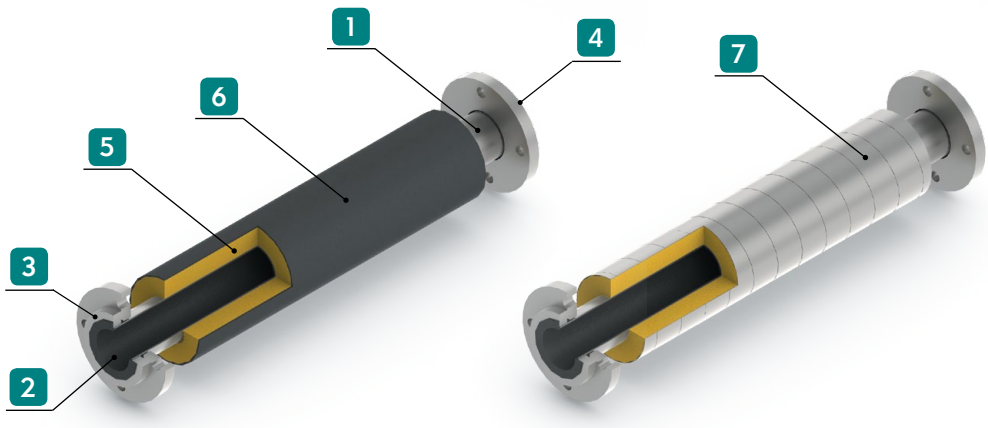

PSTPE-R/PO/AT pipe PSTPE-R/SPIRO pipe

Legend:

1. ST steel pipe
2. Protective lining
3. Steel flange
4. Steel free flange
5. Thermal insulation
6. PO/AT protective shell
7. SPIRO protective shell

Materials and requirements

Flanged steel pipe

Piping unit with the flanges and rings built in accordance with PN-EN 1092-1+A1:2013-07E.

- seamless steel pipe for pressure applications, compliant with the technical requirements of: PN-EN 10216-1,2,
- seamed steel pipe for pressure applications, compliant with the technical requirements of : PN-EN 10217-1,2.

Steel pipes of other technical specifications can be used ion request.

Protective lining

The inner layer (surface) of the steel pipe, made of plastic to protect the steel pipe.
It is made of PEHD in standard version.
The protective lining can be manufactured from other plastic materials on request.

Thermal insulation

The thermal insulation is made of hard polyurethane foam, type PUR/T, with the physical and mechanical properties shown in Table 5.

Protective shell

- Polyethylene pipe
  The protective shell is a class PE80 or PE100 HDPE pipe, type PO/AT, with the anti-static and flame-retarding properties listed in Table 6.
- The pipe is made of galvanised SPIRO spiral metal sheet strips acc. to PN-EN 10346:2011P.

Steel flanges

- type 32 welded flat ring, made acc. to PN-EN 1092-1+A1:2013-07E,
- type 02 free flat flange, made acc. to PN-EN 1092-1+A1:2013-07E,
- type 11 welded neck flange, made acc. to PN-EN 1092-1+A1:2013-07E.

Types (versions)

Table 12. PST pre-insulated steel pipe (without protective lining)

PO/AT protective shell	SPIRO protective shell	Design form
PST-R/PO/AT	PST-R/SPIRO	Pipe
PST-K/PO/AT	PST-K/SPIRO	Elbow (bend)
PST-T/PO/AT	PST-T/SPIRO	Tee

Table 13. PST pre-insulated steel pipe (with protective lining)

PO/AT protective shell	SPIRO protective shell	Design form
PSTPE-R/PO/AT	PSTPE-R/SPIRO	Pipe
PSTPE-K/PO/AT	PSTPE-K/SPIRO	Elbow (bend)
PSTPE-T/PO/AT	PSTPE-T/SPIRO	Tee

Specification

Table 14 defines the basic technical specification of pipes. The maximum operating pressure (p_d) values are according to Table 10.
The relationship of the maximum operating pressure (p_d) to the nominal pressure (PN) is according to Table 11.

Table 14. Technical specification of pre-insulated steel pipes

Line pipe			Protective shell			
			SPIRO		PO/AT	
Nominal dimension DN	Outer diameter d_z [mm]	Maximum operating pressure p_d [MPa]	Inner diameter d_s [mm]	Wall thickness e_s [mm]	Outer diameter D_c [mm]	Wall thickness t_n [mm]
65	76,1	Table 10	140	0,6	140	3,0
80	88,9		160	0,6	160	3,0
100	114,3		200	0,6	200	3,2
125	139,7		224	0,6	225	3,4
150	168,3		250	0,6	250	3,6
200	219,1		315	0,8	315	4,1
250	273,0		400	0,8	400	4,8
300	323,9		450	0,8	450	5,2
350	355,6		500	0,8	500	5,6

Dimensions of applied flange connectionsy

Pursuant to PN-EN 1092-1+A1:2013-07E, the form and type of applied flanges depends on the nominal pressure (PN) adopted for the given design of flanged steel pipe and its accessories.

For the pressure range of PN6 to PN40, the pipe design shall use type 32 welded flat flange and type 02 free flat flange.

For the pressure range of PN63 to PN160, the pipe design shall use type 11 neck flange.

The actual dimensions of flange connection components may vary from the values listed in the respective tables of PN-EN 1092-1+A1:2013-07E by the permissible tolerance values listed in Table 22 of PN-EN 1092-1+A1:2013-07E.
The number and diameter of holes for fasteners may vary from those listed in the respective tables of PN-EN 1092-1+A1:2013-07E and can be adapted to custom requirements or the system design.

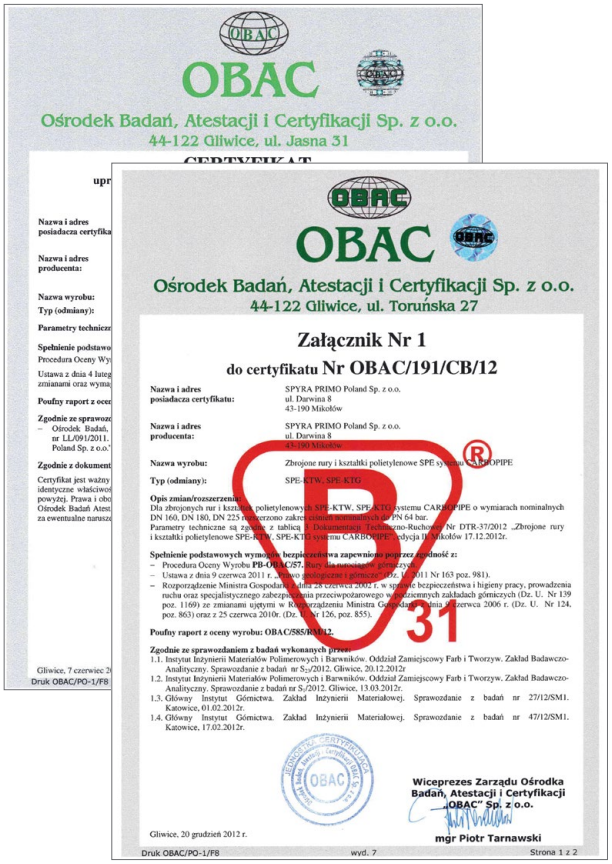

OBAC

Ośrodek Badań, Atestacji i Certyfikacji Sp. z o.o.
44-122 Gliwice, ul. Jasna 31

Załącznik Nr 1
do certyfikatu Nr OBAC/191/CB/12

Nazwa i adres posiadacza certyfikatu: SPYRA PRIMO Poland Sp. z o.o. ul. Darwina 8 43-190 Mikołów

Nazwa i adres producenta: SPYRA PRIMO Poland Sp. z o.o. ul. Darwina 8 43-190 Mikołów

Nazwa wyrobu: Zbrojone rury i kształtki polietylenowe SPE system CARBOPIPE

Typ (odmiany): SPE-KTW, SPE-KTG

Opis zmian/rozszerzenia:
Dla zbrojonych rur i kształtek polietylenowych SPE-KTW, SPE-KTG systemu CARBOPIPE o wymiarach nominalnych DN 160, DN 180, DN 225 rozszerzono zakres ciśnień nominalnych do PN 64 bar.
Parametry techniczne są zgodne z tablicą 1 Dokumentacji Techniczno-Ruchowej Nr DTR-37/2012 „Zbrojone rury i kształtki polietylenowe SPE-KTW, SPE-KTG systemu CARBOPIPE" edycja 1 Mikołów 17.12.2012r.

Spełnienie podstawowych wymagań bezpieczeństwa zapewniono poprzez zgodność z:
– Procedurą Oceny Wyrobu PB-OBAC/57, wydanie 3 z dnia 31.01.2012r.
– Ustawą z dnia 9 czerwca 2011 r. „Prawo geologiczne i górnicze" (Dz. U. 2011 Nr 163 poz. 981).
– Rozporządzenie Ministra Gospodarki z dnia 28 czerwca 2002 r. w sprawie bezpieczeństwa i higieny pracy, prowadzenia ruchu oraz specjalistycznego zabezpieczenia przeciwpożarowego w podziemnych zakładach górniczych (Dz. U. Nr 139 poz. 1169) ze zmianami ujętymi w Rozporządzeniu Ministra Gospodarki z dnia 9 czerwca 2006 r. (Dz. U. Nr 124, poz. 863) oraz z 25 czerwca 2010r. (Dz. U. Nr 126, poz. 855).

Poufny raport z oceny wyrobu: OBAC/585/RO/12.

Zgodnie ze sprawozdaniem z badań wykonanych przez:
1.1. Instytut Inżynierii Materiałów Polimerowych i Barwników. Oddział Zamiejscowy Farb i Tworzyw. Zakład Badawczo-Analityczny. Sprawozdanie z badań nr S_{27}/2012. Gliwice, 20.12.2012r
1.2. Instytut Inżynierii Materiałów Polimerowych i Barwników. Oddział Zamiejscowy Farb i Tworzyw. Zakład Badawczo-Analityczny. Sprawozdanie z badań nr S_5/2012. Gliwice, 13.03.2012r.
1.3. Główny Instytut Górnictwa. Zakład Inżynierii Materiałowej. Sprawozdanie z badań nr 27/12/SM1. Katowice, 01.02.2012r.
1.4. Główny Instytut Górnictwa. Zakład Inżynierii Materiałowej. Sprawozdanie z badań nr 47/12/SM1. Katowice, 17.02.2012r.

Wiceprezes Zarządu Ośrodka Badań, Atestacji i Certyfikacji „OBAC" Sp. z o.o.
mgr Piotr Tarnawski

Gliwice, 20 grudzień 2012 r.

Druk OBAC/PO-1/F8 wyd. 7 Strona 1 z 2

RAG

Certyfikat

Zlecenie-Nr.: 100005926

RAG Deutsche Steinkohle, Dział Serwisu Technika i Usługi Logistyczne
DZ - Badania

RAG

Zertifikat

Auftrags-Nr.: 100005926

Die RAG Deutsche Steinkohle, Servicebereich Technik- und Logistikdienste DZ-Prüfwesen

bescheinigt hiermit, dass beim Unternehmen

Spyra Primo Poland Sp. z o.o.
ul. Darwina 8
43-190 Mikołów-Paniowy

ein Audit durchgeführt wurde.

Inhalt des Audits waren die QS-Elemente:

+++ Firmenpolitik
+++ Personal
+++ Kapazitäten
+++ Planung, Entwicklung und Konstruktion
+++ Dokumentation / Eignungsnachweise
+++ Qualität bei der Beschaffung
+++ Qualität in der Produktion
+++ Produktionslenkung
+++ Produktverifizierung, Prüfmittelüberwachung und Sicherheitschecks
+++ Behandlung fehlerhafter Produkte
+++ Handhabung und Aufgaben nach der Produktion
+++ Servicefähigkeit, Material- und Ersatzteilversorgung
+++ Behandlung von Reklamationen

Das Audit für das Produktsegment

Fertigung von Kunststoffrohren für den untertägigen Steinkohlenbergbau

fand beim o. a. Unternehmen in der Zeit vom 05. bis 07.07.2011 statt.

Die Grundlage des Audits basiert auf das bei RAG Deutsche Steinkohle eingesetzte Bewertungs-Teilkriterium "Systemaudit" in SAP-Modul QM.

leitender Auditor: Dipl.-Ing. Thomas Siebert
Fachauditor Dipl.-Ing. Peter Trautwein
Ausstelldatum: 08.07.2011

Hinweis: Einzelheiten zum Ergebnis sind dem zugehörigen Auditbericht zu entnehmen.

VVUÚ, a. s.
Certifikační orgán na výrobky
Pikartská 1337/7, 716 07 Ostrava – Radvanice
IČ: 45193380

CERTIFIKÁT
č. VVUÚ–154/H/2010
vydaný

Žadatel: SPYRA PRIMO Poland Sp. z o.o.
Ul. Darwina 8
43-190 Mikołów, Polsko
(obchodní jméno, název, adresa)

na výrobek: Polyetylenové přírubové potrubí SPE systému CARBOPIPE, typ SPE-KTG
(název, typ, jmenovité hodnoty apod.)

Výše uvedený certifikační orgán tímto certifikátem potvrzuje, že vzorek předmětného výrobku je ve shodě:
– s požadavky § 185 vyhlášky ČBÚ č. 22/1989 Sb., ve znění pozdějších předpisů;
– s požadavky zákona č. 102/2001 Sb., ve znění pozdějších předpisů.

Výrobek je možno používat v podzemí do prostoru plynujících dolů s nebezpečnými atmosférickými podmínkami 2 a 1 podle ČSN EN 1127-2 pro přepravu vody, nehořlavé kapaliny, vodní suspenze, stlačeného vzduchu, inertních plynů a metanu za dodržení níže uvedené podmínky:
– Potrubí v prostorech s nebezpečnými atmosférickými podmínkami 2 a 1 musí být uzemněno podle požadavků ČSN 33 2030.

Výrobce zvolil certifikační schéma COV – 2A (Popis schématu viz Zpráva o hodnocení).

Nedílnou součástí tohoto certifikátu je Zpráva o hodnocení č. VVUÚ–016252/2010, ze dne 15. 9. 2010, vydaná VVUÚ, a. s., Certifikačním orgánem na výrobky ve VVUÚ, a. s., Pikartská 1337/7, 716 07 Ostrava – Radvanice.

Tento certifikát se vydává pro účely prohlášení výrobce o shodě výrobku s výše uvedenými technickými předpisy.

Výrobky, na které se vztahuje tento certifikát, podléhají dohledu a kontrole certifikačního orgánu v intervalu 1krát za 3 roky, a to na základě požadavku výrobce. Držitel certifikátu je povinen dodržovat zásady pro používání certifikátu, které jsou uvedeny na druhé straně (rubu) certifikátu.

Platnost certifikátu je omezena do 30. 9. 2016.

15. 9. 2010, Ostrava – Radvanice
Datum a místo vydání certifikátu

Ing. Tomáš Dorazil
vedoucí COV

2003-09-01 VVUÚ-154-H-2010.doc

SPYRA PRIMO

www.spyraprimo.pl

Spyra Primo Poland Sp. z o.o.
43-190 Mikołów-Paniowy
Darwina 8
Tel: +48 32 33 00 930
Fax: +48 32 33 00 931
spyraprimo@spyraprimo.pl
biuro@spyraprimo.pl

November 2015
ver. 0.8 ENG